PART NO 912118

VERTICAL BRACKET

Vertikalfäste | Vertikalfeste | Vertikalus statramscio laikiklis | Dıkey braket

- L: 178 mm
- W: 61 mm
- H: 200 mm
- 1,4 kg
- Steel + Zn (hot dip galvanized)
- EN13374 – A

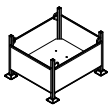

- 1,03 × 0,91 × 0,65 m
- 320 kg
- 200 pcs

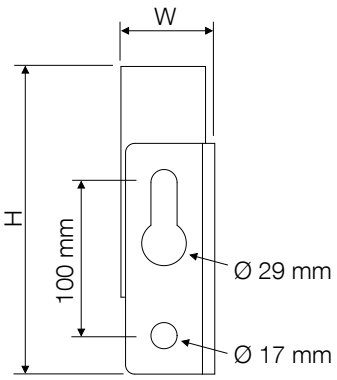

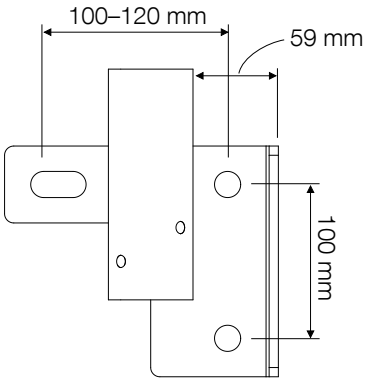

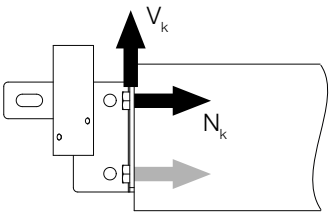

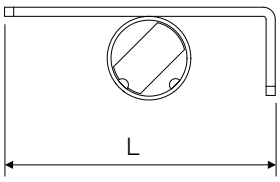

ANCHOR LOADS (Q)[1]	(Per anchor, unfactored)
N_k	5,5 kN
V_k	1,5 kN

1) EN 13374:2013

$Q_{k,i} \times \gamma_F^* = E_d \leq R_d = R_k / \gamma_M\ (k_{mod}^{**})$

$^* \gamma_F = 1{,}5$ *** for timber*

ALT.

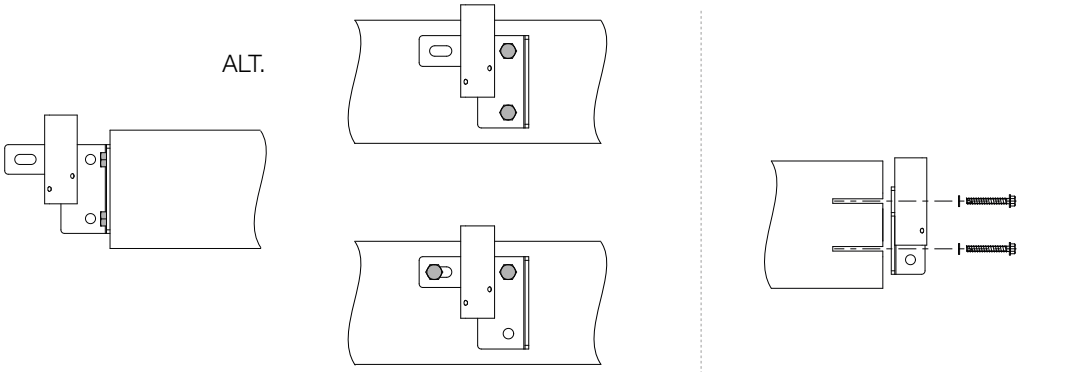

We reserve the right to make technical changes (Jan. 19 2024).